Vino Rails Post Plate spec sheet

Spec Sheet for (VR3-PL)

SCAN FOR BILT. 3D INSTRUCTIONS

POWERED BY BILT INTELLIGENT INSTRUCTIONS®

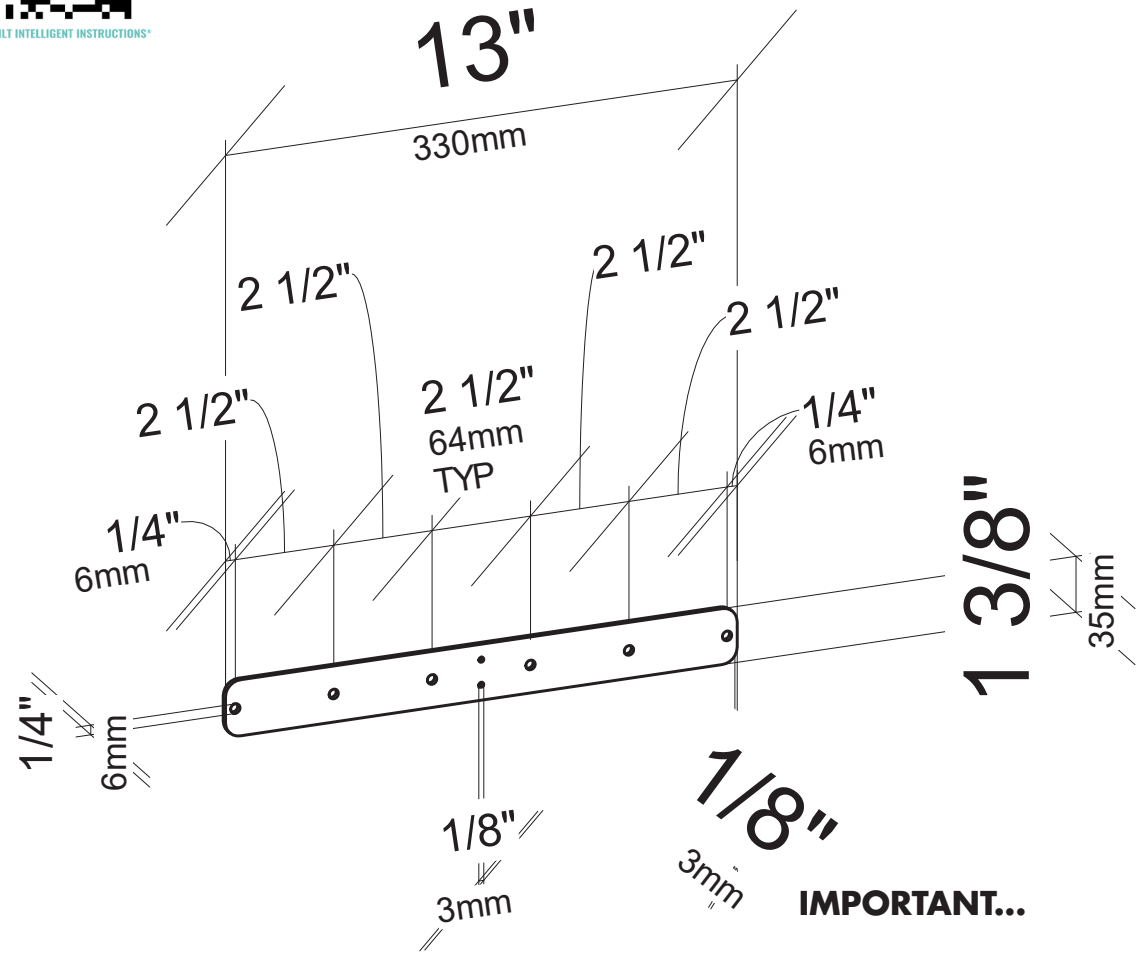

IMPORTANT...

Allow for 13″ (330mm) total depth to accomodate most 750ml wine bottles.

VINTAGEVIEW®
MOVING WINE STORAGE FORWARD

4690 Joliet St., Denver, CO 80239 | phone: 866.650.1500 | fax: 866.650.1501 | VintageView.com

For product warranty information, please visit vintageview.com/warranty